Angled M923 Power Male Square Assembled Socket (Crimp, Mount hole 19.8x19.8)

尺寸图

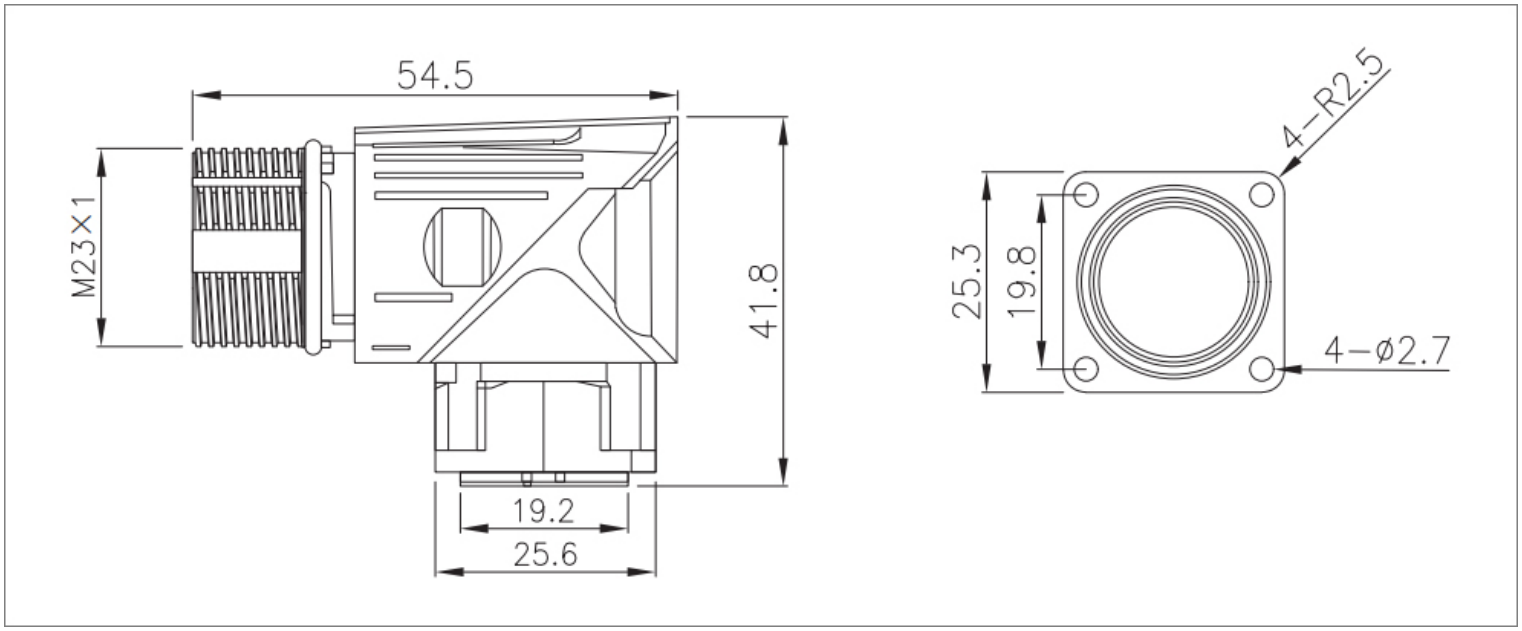

接线定义

芯位 Pins	线芯颜色 Wire core color	导体规格 Conductor size
	6芯(Pins)	
1	BK U	1.5mm²
2	BN V	1.5mm²
3	GNYE	1.5mm²
4	BK	1.5mm²
5	WH	1.5mm²
6	BN K	1.5mm²

芯位 Pins	线芯颜色 Wire core color	导体规格 Conductor size
	8芯(Pins)	
1	BK 1	1.5mm²
PE	GNYE	1.5mm²
3	BK 2	1.5mm²
4	BK 3	1.5mm²
A	BK 5	0.75mm²
B	BK 6	0.75mm²
C	BK 7	0.75mm²
D	BK 8	0.75mm²

芯位 Pins	线芯颜色 Wire core color	导体规格 Conductor size
	12芯(Pins)	
1	PK	0.25mm²
2	RD	0.25mm²
3	BK	0.25mm²
4	BU	0.25mm²
5	BN	0.25mm²
6	GN	0.25mm²
7	VT	0.25mm²
8	GY	0.25mm²
9	外部护套	(Outer sheath)
10	WH	0.5mm²
11	NC	
12	BN	0.5mm²

芯位 Pins	线芯颜色 Wire core color	导体规格 Conductor size
	17芯(Pins)	
1	YE	0.14mm²
2	GN	0.14mm²
3	RD	0.14mm²
4	NC	
5	BU	0.14mm²
6	NC	
7	BNBU	0.5mm²
8	GNBK	0.22mm²
9	GNRD	0.22mm²
10	BNRD	0.5mm²
11	BK	0.14mm²
12	BN	0.14mm²
13	OG	0.14mm²
14	WHBK	0.14mm²
15	BNGY	0.22mm²
16	BNYE	0.22mm²
17	内部护套	(Inner sheath)

*接线定义按常规标准，如按协议或者其他请联系我司业务。
Wiring definition according to conventional standards, if according to the agreement or other please contact our sales.

电气参数

Angled M923 Power Male Square Assembled Socket (Crimp, Mount hole 19.8x19.8)

芯数 Pins	针型 Male	额定电流 Ratedcurrent	额定电压 Rated voltage		导体规格 Conductor size		孔型 Female
			A/C	D/C	AWG	mm²	
6		30A	630V	630V	14	2.5	
8	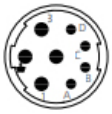	9A/20A	250V/630V	250V/630V	18/14	1/2.5	