M12 plastic dust cover (outer teeth+rubber chain)

尺寸图

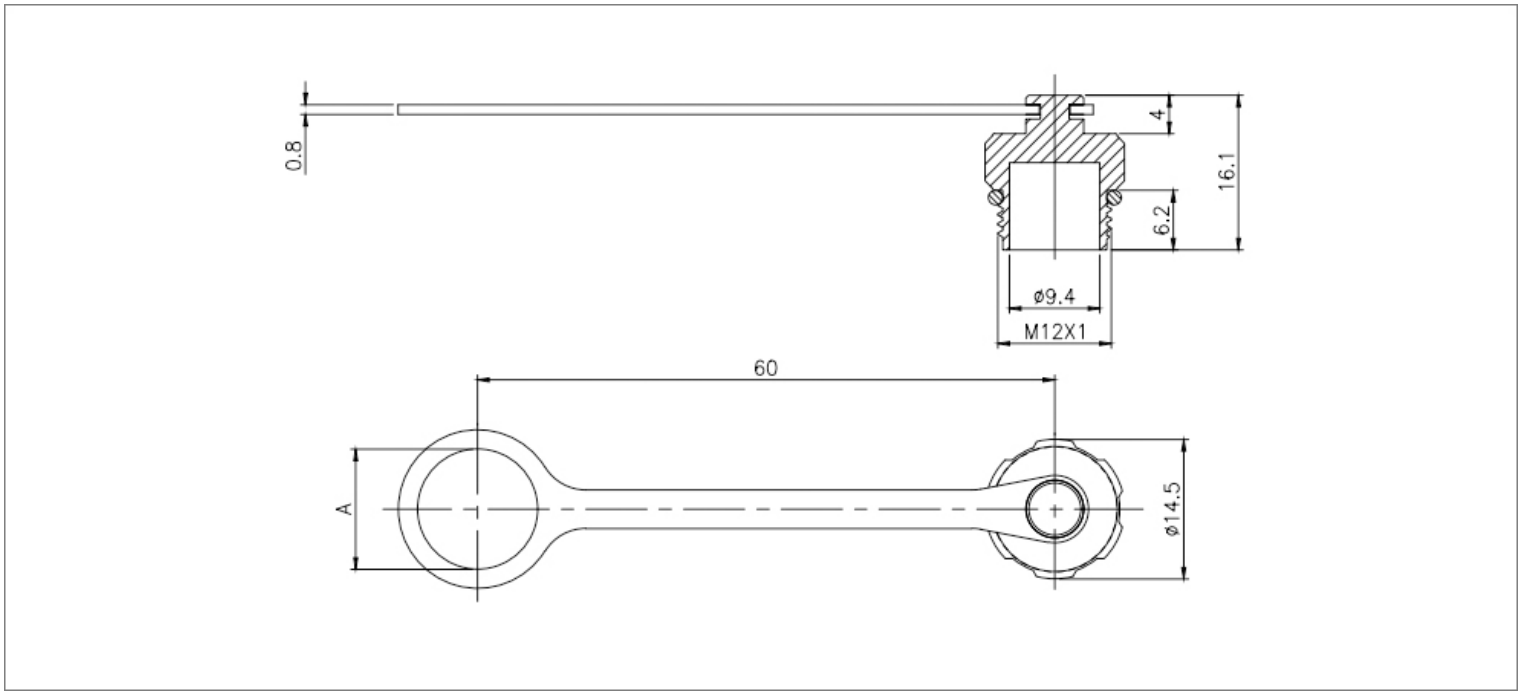

STA思大-元器件专业提供商!