4582XX

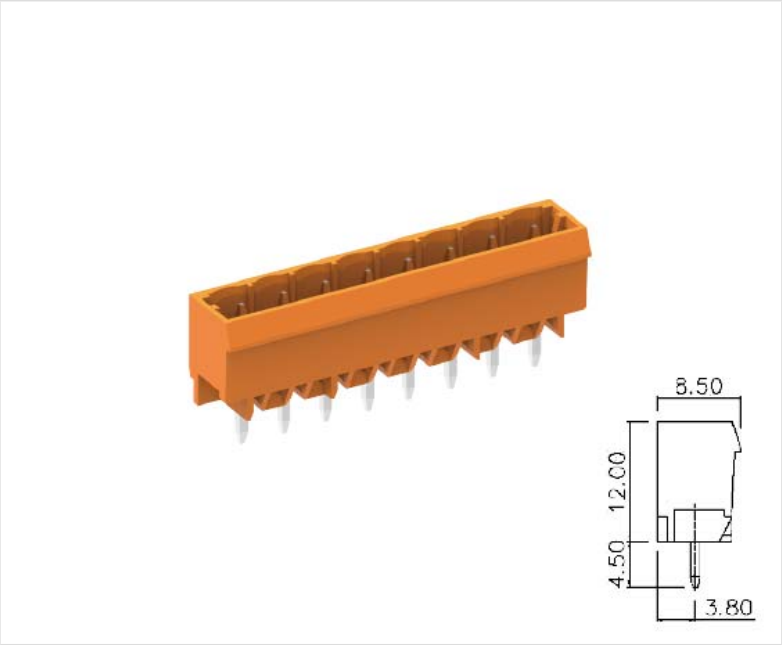

- 产品类型：多用途弹簧端子,
- 接线方式：弹片连接,
- 间距：5.08mm,
- 电压：300V,
- 电流：15A,
- 位数：2-24P

基本参数

间距(Pitch):	5.08mm
电压(Rated voltage)-UL:	300V
电流(Rated current)-UL:	15A
电压(Rated voltage)-IEC:	320V
电流(Rated current)-IEC:	12A
线径(Wire range)-UL:	-
线径(Wire range)-IEC:	-
位数(Pole number):	02~24P
绝缘材料(Insulation Material):	PA66 UL94 V-0
电流承载部件材料和镀层(Material & Plating of Current carrier):	Copper alloy, Tin plated
绝缘电阻(Insulation Resistance):	500MΩ or more at DC500V
耐电压(1分钟)(Withstanding Voltage/1Min):	2200V/1Min
额定冲击电压(Rated surge voltage):	4.0KV
接线螺丝(Wire clamp unit Screw), 最大扭矩(torque Max.):	-
固定螺丝(Mounting Screw), 扭矩(torque):	-
接线弹片材料(Material of Clamp spring):	Stainless steel(GrNi)
剥线长度(Wire stripping length):	9.0mm
使用温度(Operating temperature):	-40℃ ~ +115℃
焊接方式(Soldering recommend):	-
认证(Approval):	

STA思大-元器件专业提供商!

尺寸图

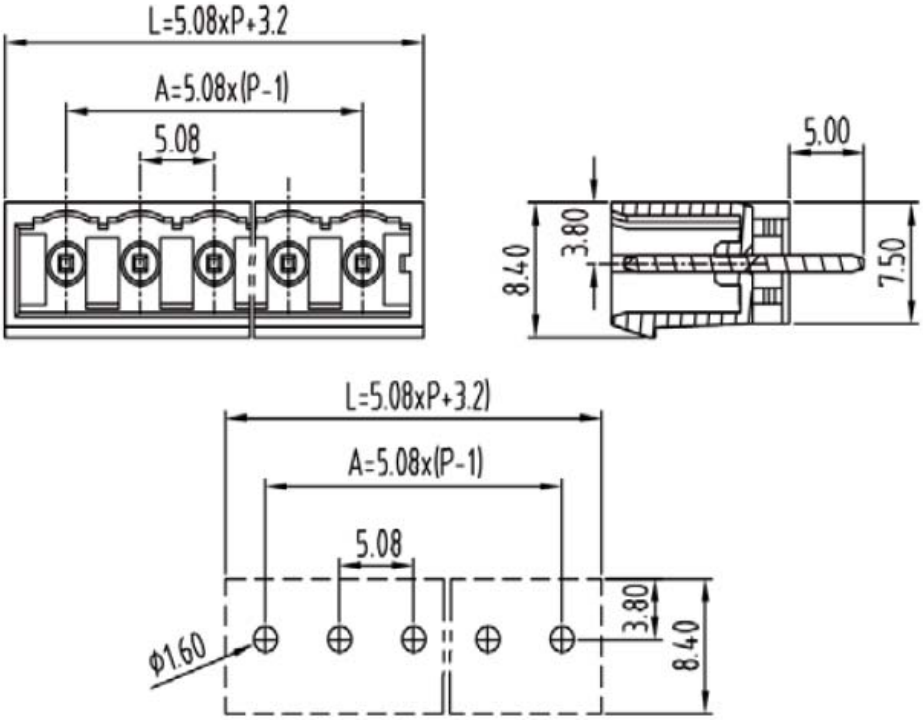

PCB Layout

订购产品

产品名称	间距	位数	产品型号	3D下载	2D下载
多用途弹簧端子	5.08mm	02~24P	4582XX		

资料下载

产品目录	接线端子选型手册

STA思大-元器件专业提供商!