# E13 Male Back Mount PCB Receptacle(Bayonet)

## 尺寸图

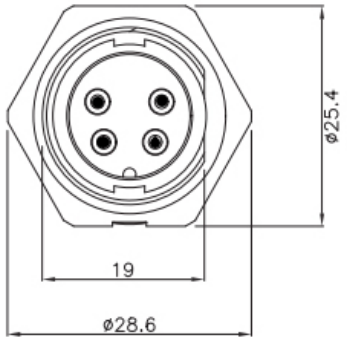


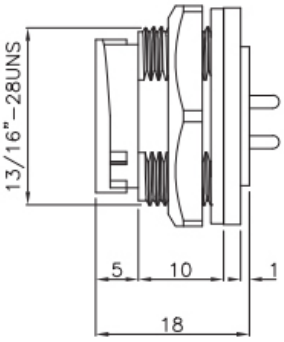


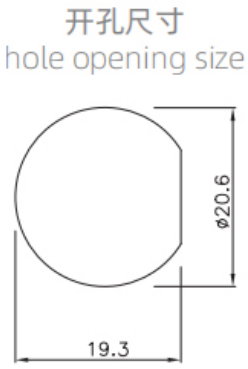


## PCB芯位图

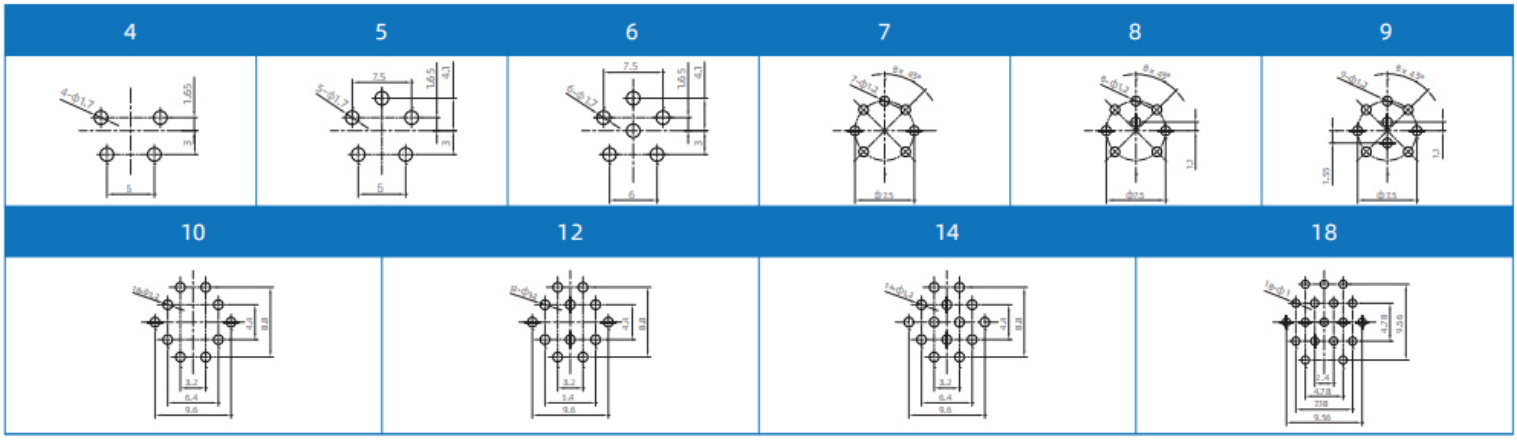


## 电气参数

| 芯数排列及技术参数 Pins arrangement & Technical parameters | | | | | | | | | | | | | | | | |
|---|---|---|---|---|---|---|---|---|---|---|---|---|---|---|---|---|
| 芯数 Pins | 2B | | 3B | | 4B | | 2 | | 3 | | 4 | | 5 | | 6 | |
| 芯位排布 Pins arrangement |  | |  | |  | |  | |  | |  | |  | |  | |
| 芯数 Pins | 8C | | 7 | | 8 | | 9 | | 10 | | 12 | | 14 | | 18 | |
| 芯位排布 Pins arrangement |  | |  | |  | |  | |  | |  | |  | |  | |

| 规格 Specifications | | | | | | | | | | | | | | | | |
|---|---|---|---|---|---|---|---|---|---|---|---|---|---|---|---|---|
| 芯数 Pins | 2B | 3B | 4B | 2 | 3 | 4 | 5 | 6 | 8C | 7 | 8 | 9 | 10 | 12 | 14 | 18 |
| 线规 Wire gauge | 2.5mm²(14AWG) | | | | | 0.823mm²(18AWG) | | | 16AWG+ 22AWG | 0.519mm²(20AWG) | | | | | | 22AWG |
| 引脚类型 Pin type | ø2.4mm | | | | | ø1.6mm | | | ø2.0mm+ ø0.8mm | ø1.0mm | | | | | | ø0.8mm |
| 接线范围 Wiring range | 6.0mm~10.0mm | | | | | | | | | | | | | | | |
| 防水等级 Waterproof grade | IP67/IP68 | | | | | | | | | | | | | | | |
| 插拔次数 Durability | 500 | | | | | | | | | | | | | | | |
| 适应温度 Applicable temperature | -45℃~105℃ | | | | | | | | | | | | | | | |
| 额定电压 Rated voltage | 300V | 300V | 300V | 125V | 125V | 125V | 125V | 125V | 125+30V | 60V | 60V | 60V | 60V | 60V | 60V | 30V |
| 额定电流 Rated current | 20A | 20A | 20A | 20A | 20A | 10A | 10A | 10A | 15+2A | 5A | 5A | 5A | 5A | 5A | 5A | 2A |