SPA500-02（SPA508-02）

- 产品类型：插拔式端子,
- 接线方式：弹簧连接,
- 间距：5.00mm(5.08mm),
- 电压：300V,
- 电流：12A,
- 位数：2-24P

基本参数

间距(Pitch):	5.00mm(5.08mm)
电压(Rated voltage)-UL:	300V
电流(Rated current)-UL:	12A
电压(Rated voltage)-IEC:	320V
电流(Rated current)-IEC:	15A
线径(Wire range)-UL:	24-12AWG
线径(Wire range)-IEC:	0.34-2.5mm²
位数(Pole number):	02~24P
绝缘材料(Insulation Material):	PA66 UL94 V-0
电流承载部件材料和镀层(Material & Plating of Current carrier):	Copper alloy, Tin plated
绝缘电阻(Insulation Resistance):	500MΩ or more at DC500V
耐电压(1分钟)(Withstanding Voltage/1Min):	2200V
额定冲击电压(Rated surge voltage):	-
接线螺丝(Wire clamp unit Screw), 最大扭矩(torque Max.):	-
固定螺丝(Mounting Screw), 扭矩(torque):	-
接线弹片材料(Material of Clamp spring):	-
剥线长度(Wire stripping length):	10.0mm
使用温度(Operating temperature):	-40℃ ~ +105℃
焊接方式(Soldering recommend):	-
认证(Approval):	

STA思大-元器件专业提供商!

尺寸图

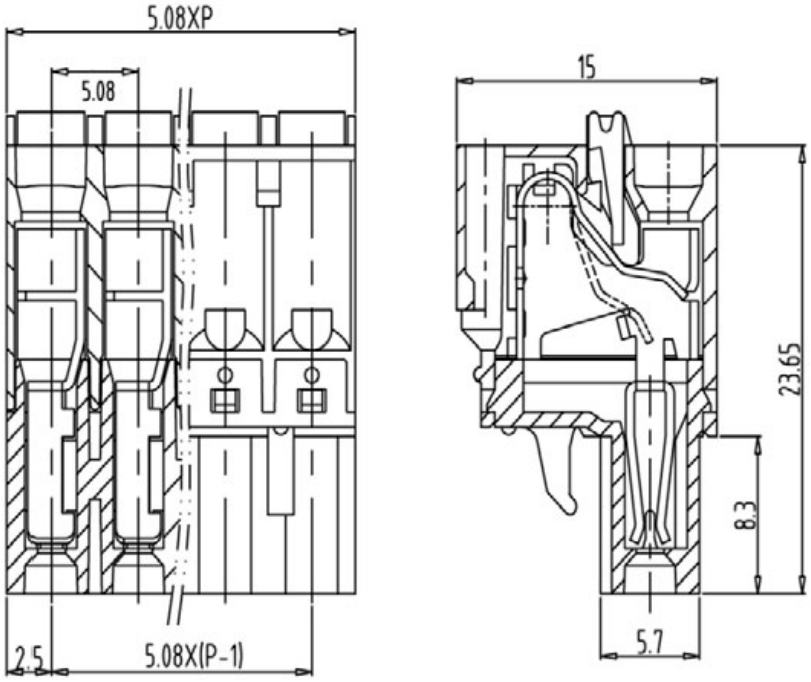

订购产品

产品名称	间距	位数	产品型号	3D下载	2D下载
插拔式端子	5.00mm	02~24P	SPA500-02		
插拔式端子	5.08mm	02~24P	SPA508-02		

资料下载

产品目录	接线端子选型手册

STA思大-元器件专业提供商!